Test report

1. Terms of Reference

- Check of the dimensions and general requirements to formwork beams acc. to EN 13377:2002, sections 5.2 and 5.3.
- Determination of the characteristic value of shear force according to EN 13377:2002, section 5.4.2 a).
- Determination of the characteristic value of bearing pressure according to EN 13377:2002, section 5.4.2 b).
- Determination of the characteristic value of bending moment according to EN 13377:2002, section 5.4.2 c).
- Calculation of stiffness according to EN 13377:2002, section 5.4.2 d).

2. Test Material

50 prefabricated timber formwork beams at a length of 3,9 m were delivered.
According to the Manufacturer's data, the beams are made of the following components:

Flanges:
- Solid wood timber, wood species: spruce and pine
- Dimension: 80 mm x 40 mm
- A tongue and groove connection

Web:
- Plywood
- Thickness: 24 mm
- A tongue and groove connection

The formwork beams have the following imprint.
Karelia Premium H-20 beams 3,90 m
During a visual inspection, it was ascertained that the flanges are finger-jointed and the webs are butt-jointed with tongue and groove gluing.

3. Realization of Tests

3.1. Check of dimensions and general requirements acc. to EIM 13377, sections 5.2 and 5.3

The check was carried out on 25 beams.
The components of the beams were assessed visually.
Requirement regarding dimensions:
Length: nominal length: 3900 mm, maximum deviation from the nominal length: ± 10 mm
Height: nominal height: 200 mm, maximum deviation from the nominal height: ± 2 mm
Width of the flange: nominal width: 80 mm, maximum deviation: + 1 % (+ 0,8 mm), -1,5 % (-1,2 mm)
Thickness of the web: nominal thickness: 24 mm, maximum deviation: ± 3 % (± 0,72 mm)

The test was performed on 10 February 2025.

3.2. Determination of the characteristic value of shear force acc. to EIM 13377:2002, sect. 5.4.2 a)

The test was carried out on 10 beams. The distance between the Supports was 1200 mm (6 times the

height of the beams). The distance between the support and the place of load application was 400 mm. The distance between the places of load application was 400 mm. For further details, see EN 13377, Figure A.l a).
The test was realized on the universal test device Press KG 050. The failure occurred within (300±120) s. The moisture content of the beams during the test was estimated by electrical resistivity method.
The test was performed on 10 February 2025
The characteristic value of shear force was calculated acc. to EN 13377, Annex B. It shall be higher as 23,9 kN.

3.3. Determination of the characteristic value of bearing pressure acc. to EN 13377:2002, sect. 5.4.2 b)

The test was carried out on 10 beams. The distance between the supports was 1500 mm (7,5 times the height of the beams). The overhang over the supports was 750 mm (3,75 times the height of the beams). For further details, see EN 13377, Figure A.l c).
The test was realized on the universal test device Press KG 050. The failure occurred within (300±120) s. The moisture content of the beams during the test was estimated by electrical resistivity method.
The test was performed on 10 February 2025
The characteristic bearing resistance was calculated in accordance with Annex B of EN 13377.
It shall exceed 47,8 kN.

3.4. Determination of the characteristic value of bending moment acc. to EN 13377:2002, sect. 5.4.2 c)

The test was carried out on 10 beams. The distance between the supports was 3000 mm (15 times the height of the beams). For further details, see EN 13377, Figure A.l d).
The test was realized on the universal test device Press KG 050. The failure occurred within (300±120) s. The moisture content of the beams during the test was estimated by electrical resistivity method.
The test was performed on 10 February 2025.
The characteristic bending moment was calculated in accordance with Annex B of EN 13377.
It shall exceed 10,9 kNm.

3.5. Calculation of stiffness acc. to EN 13377:2002, sect. 5.4.2 d)

The stiffness is calculated acc. to EN 13377, Annex A.3 using the following parameters:
h = 40 mm
b = 80 mm
H = 200 mm
E = 11000 N/mm²
The calculation was performed on 14 February 2025
The stiffness shall be higher as 450 kNm².

4. Test results

4.1. Check of dimensions and general requirements acc. to EN 13377, sections 5.2 and 5.3

Components of the formwork beams:

Flanges:
The flanges are made of solid soft-wood. They are connected using the tongue and groove method.
Web:
The web is made of plywood. The plywood is connected using the tongue and groove method.
Adhesive:

Polyurethane KLEIBERIT

Components of the formwork beams:

Length:		
Maximum measurement: 3910 mm	deviation: + 10 mm	complied
Minimum measurement: 3905 mm	deviation: + 5 mm	complied
Height:		
Maximum measurement: 200,9 mm	deviation: + 0,9 mm	complied
Minimum measurement: 199,7 mm	deviation: - 0,3 mm	complied
Width of the flange:		
Maximum measurement: 80,7 mm	deviation: + 0,7 mm	complied
Minimum measurement: 79,2 mm	deviation: - 0,8 mm	complied
Thickness of the web:		
Maximum measurement: 24,3 mm	deviation: + 0,3 mm	complied
Minimum measurement: 23,6 mm	deviation: - 0,4 mm	complied

Determination of the characteristic value of shear force, determination of the characteristic value of bearing pressure, Determination of the characteristic value of bending moment acc. to EN 13377:2002

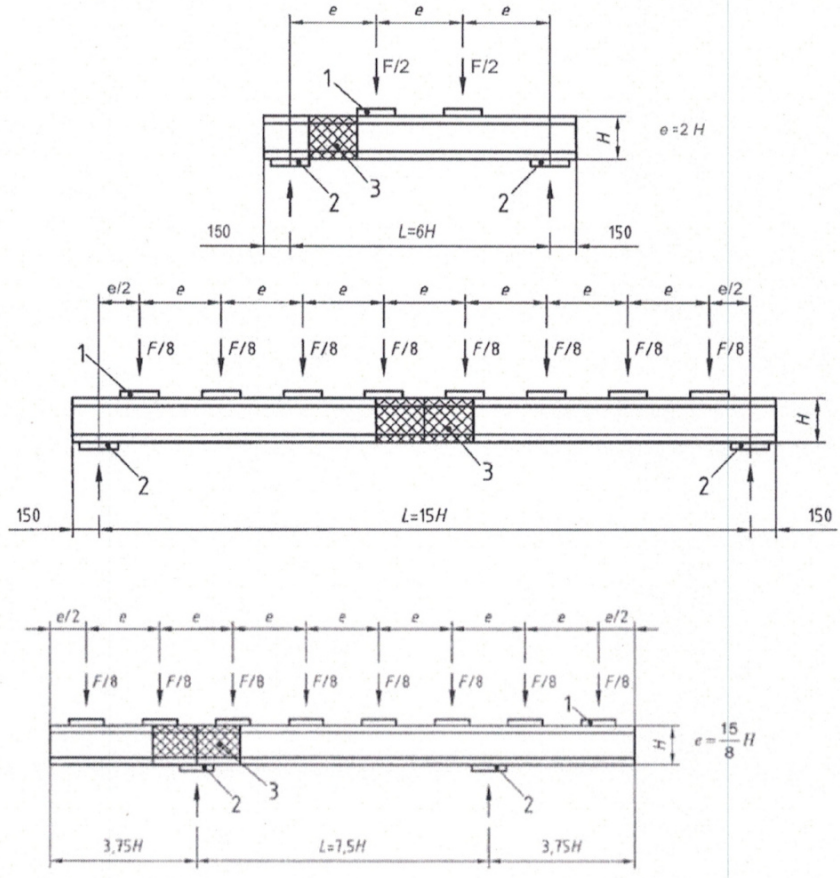

4.2. Determination of the characteristic value of shear force acc. to EN 13377:2002, sect. 5.4.2 a)

The test results are summarized at Table 1.
Table 1: Results of shear force test

Test No.	max. F	max. Q	Compliance
S1	66,0 kN	33,0 kN	
S2	59,8 kN	29,9 kN	
S3	62,4 kN	31,2 kN	
S4	64,1 kN	32,0 kN	
S5	69,6 kN	34,8 kN	
S6	57,0 kN	28,5 kN	
S7	61,4 kN	30,7 kN	
S8	59,7 kN	29,8 kN	
S9	67,1 kN	33,5 kN	
S10	64,2 kN	32,1 kN	
Mean value:		31,55 kN	
Minimum value:		28,50 kN	
Characteristic value:		27,74 kN	complied

The beams were destroyed either by a knot in the lower flange or by a tongue and groove joint in the lower flange.

The moisture content was at a range of 11,5 % to 12,4 %.

4.3. Determination of the characteristic value of bearing pressure acc. to EN 13377:2002, sect. 5.4.2 b)

The test results are summarized at Table 2.
Table 2: Results of bearing pressure test

Test No.	max. F	max. Rb	Compliance
R1	77,2 kN	77,2 kN	
R2	60,9 kN	60,9 kN	
R3	65,2 kN	65,2 kN	
R4	61,2 kN	61,2 kN	
R5	58,2 kN	58,2 kN	
R6	60,9 kN	60,9 kN	
R7	64,9 kN	64,9 kN	
R8	76,8 kN	76,8 kN	
R9	61,2 kN	61,2 kN	
R10	59,7 kN	59,7 kN	
Mean value:		64,62 kN	
Minimum value:		58,20 kN	
Characteristic value:		52,05 kN	complied

The beams were destroyed either by a knot in the lower flange or by a tongue and groove joint in the lower flange.

The moisture content was at a range of 11,6 % to 12,5 %.

4.4. Determination of the characteristic value of bending moment acc. to EN 13377:2002, sect. 5.4.2 c)

The test results are summarized at Table 3.
Table 3: Results of bending moment test

Test No.	max. F	max. M	Compliance
M1	28,7 kN	14,3 kNm	
M2	24,4 kN	12,2 kNm	
M3	26,0 kN	13,0 kNm	
M4	27,2 kN	13,6 kNm	
M5	31,5 kN	15,7 kNm	
M6	24,6 kN	12,3 kNm	
M7	32,0 kN	16,0 kNm	
M8	29,4 kN	14,7 kNm	
M9	32,5 kN	16,2 kNm	
M10	26,8 kN	13,4 kNm	
Mean value:		14,14 kNm	
Minimum value:		12,20 kNm	
Characteristic value:		11,29 kNm	complied

The beams were destroyed either by a knot in the lower flange or by a tongue and groove joint in the lower flange.

The moisture content was at a range of 13,3 % to 13,6 %.

4.5. Calculation of stiffness acc. to EN 13377:2002, sect. 5.4.2 d)

Calculation of inertia moment: $I = 41\ 813\ 333\ mm^4$

Calculation of stiffness: $Ei=459,9\ kNm^2$

The calculated stiffness complies with the requirement.

5. Evaluation

LLC Center for Metrology and Testing was ordered by " KARELIA GROUP LTD" Company to carry out tests on formwork beams of Type P20 acc. to EN 13377:2002.
The beams are made of timber for the flanges and plywood for the web. Documents regarding the strength dass of the timber and regarding technical dass of the plywood are not available.

Table 4: Summary of test results and comparison with the requirements

Characteristic	Requirement	Test result	Compliance
Deviation in length (max.)	< 10 mm	+10 mm	complied
Deviation in length (min.)	< 10 mm	+5 mm	complied
Deviation in height (max.)	< 2 mm	+0,9 mm	complied
Deviation in height (min.)	< 2 mm	-0,3 mm	complied
Deviation in width of the flange (max.)	<1% (< 0,8 mm)	+0,7 mm	complied
Deviation in width of the flange (min.)	<1,5% (<1,2 mm)	-0,8 mm	complied
Deviation in thickness of the web (max.)	<3% (<0,72 mm)	+0,3 mm	complied
Deviation in thickness of the web (min.)	<3% (<0,72 mm)	-0,4 mm	complied
Shear force Vk	> 23,9 kN	27,74 kN	complied
Bearing pressure Rb,k	> 47,8 kN	52,05 kN	complied
Bending moment Mk	> 10,9 kNm	11,29 kNm	complied
Bending stiffness EI	> 450 kNm²	459,9 kNm²	complied

The tested formwork beams do comply with the requirements of EN 13377:2002.

Annex: Drawing of the cross-section of the formwork beams made by the Manufacturer.

The tests were carried out by the leading engineer of the test center Lunareva R.I.